Published: 11-May-2011

Automatic Transmission / Transaxle External Controls - V8 5.0L Petrol / TDV6 3.0L Diesel - External Controls

Description and Operation

COMPONENT LOCATION

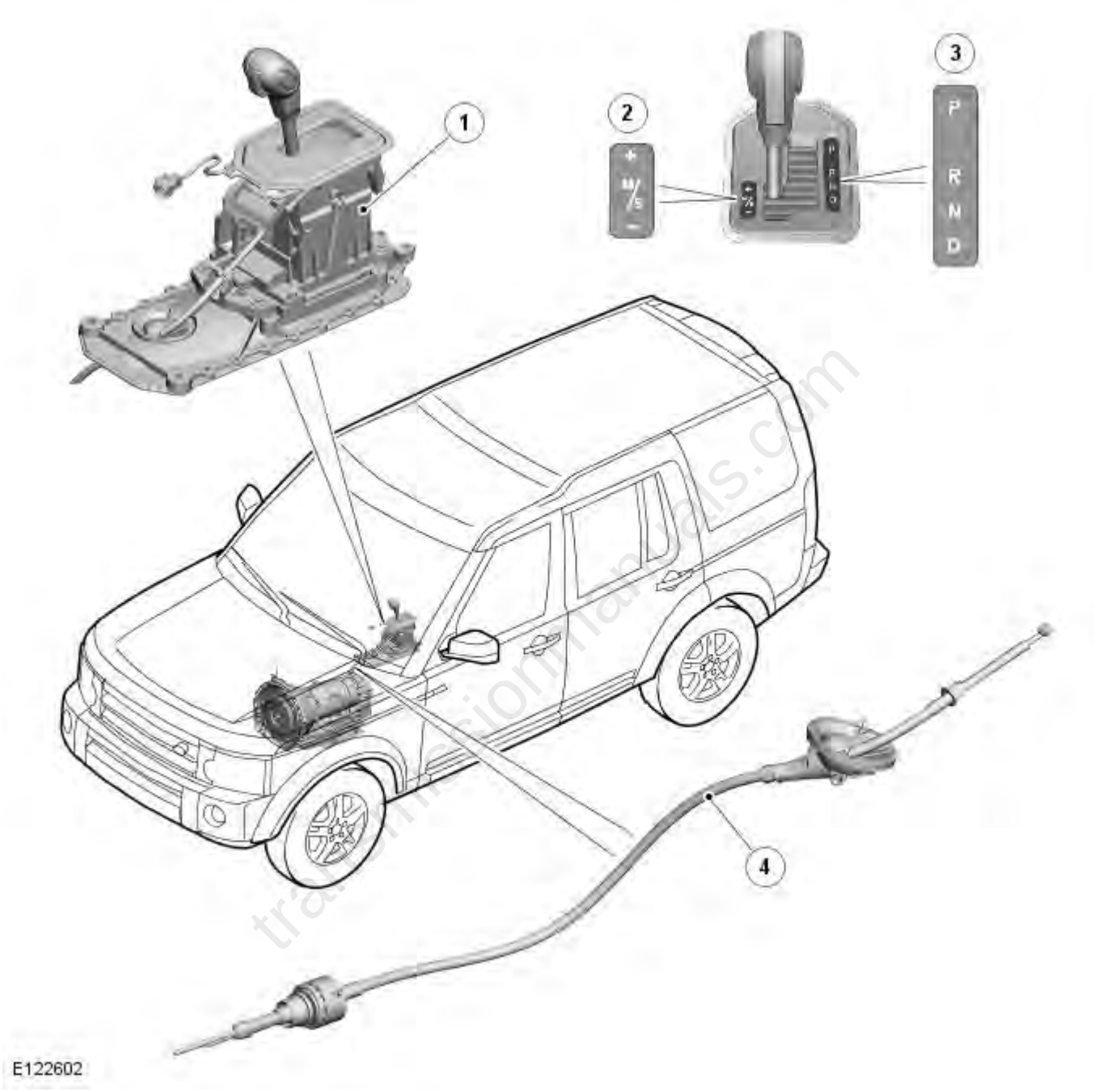

Item	Part Number	Description
1	-	Selector lever assembly
2	-	M/S (manual/sport) display
3	-	Selector lever position display
4	-	Selector cable

INTRODUCTION

The external controls for the transmission consist of a selector lever assembly and a selector cable.

The selector cable transmits the position of the selector lever to the transmission.

The selector lever position is displayed on the selector lever position display and the M/S (manual/sport) display. The selector lever position and current forward gear are also displayed in the instrument cluster.
For additional information, refer to: Transmission Description (307-01D Automatic Transmission/Transaxle - V8 5.0L Petrol/TDV6 3.0L Diesel, Description and Operation).

SELECTOR LEVER ASSEMBLY

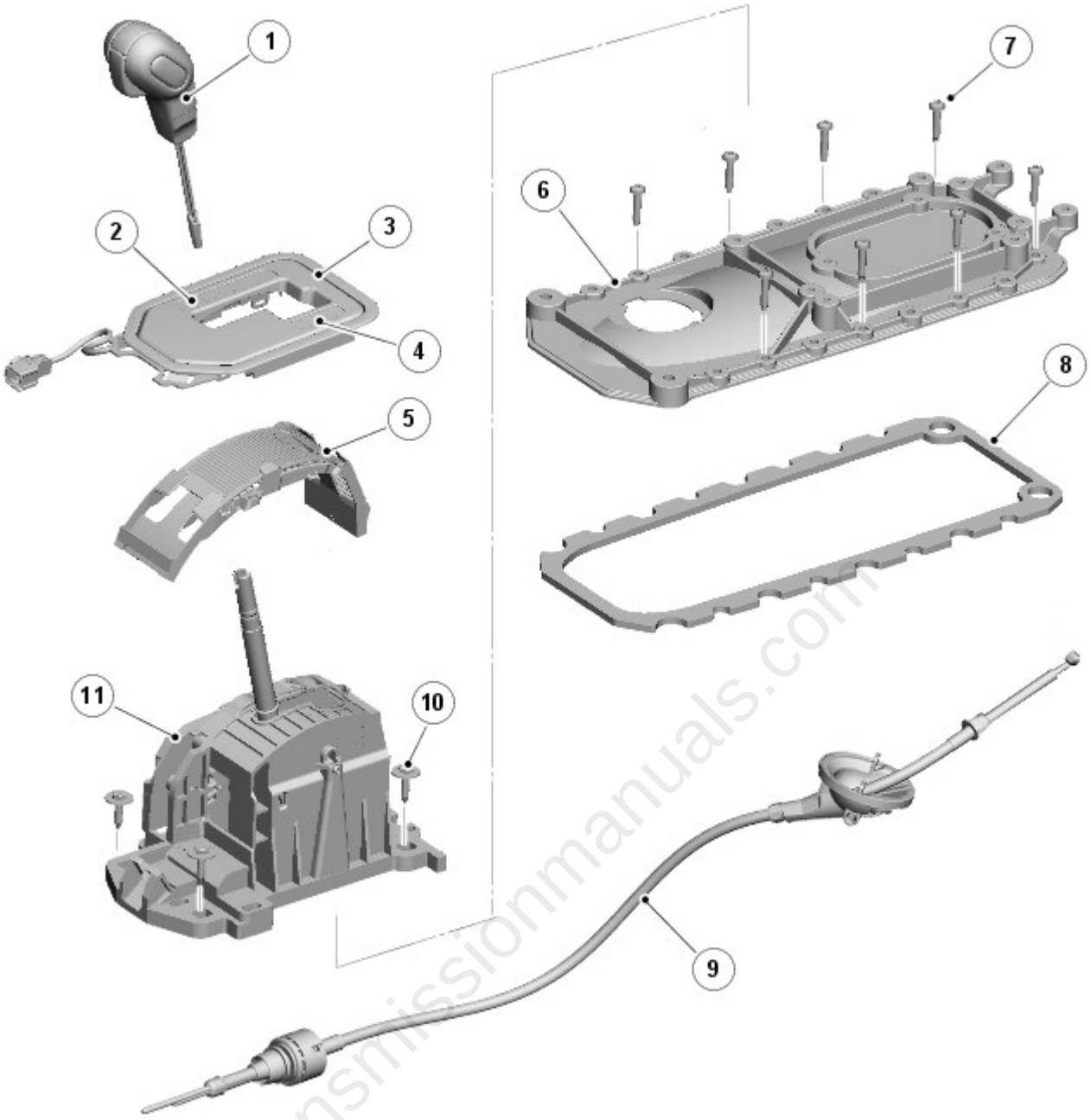

Item	Part Number	Description
1	-	Selector lever
2	-	Selector lever position display
3	-	Console panel and bezel
4	-	M/S display
5	-	Shutter
6	-	Mounting plate
7	-	Screw (8 off)
8	-	Seal
9	-	Selector cable
10	-	Screw and washer (4 off)
11	-	Interlock emergency release lever and selector assembly

The selector lever assembly is located in the floor console and is secured to the transmission tunnel closure plate. The selector lever assembly comprises a moulded plastic housing which provides for the location of the selector components.

The lever is connected to a crosspiece which allows for the selection of P, R, N, D in a forward and backward direction and selection between D and M/S in a left/right direction.

When M/S (sport) mode is selected the lever can be moved in a forward or backward direction to select + or - for manual (CommandShift®) operation. If left in sport mode, all gear changes are performed automatically.

If manual (CommandShift®) mode is selected, all gear changes are based on inputs received by the TCM (transmission control module) from manual +/- Hall effect sensors located in the selector lever assembly.

The selector lever assembly houses the following components:

transmissionmanuals.com

- PCB (printed circuit board)
- Shift Interlock solenoid
- Park and Neutral locking levers.

The selector lever positions are as follows:

- P (park) : no torque transmitted to the drive wheels and prevents the vehicle from moving by locking the transmission
- R (reverse) : selects reverse gear - only to be selected when the vehicle is stationary and the engine is at idle
- N (neutral) : no torque transmitted to the drive wheels - allows the vehicle to roll, so ensure the EPB (electronic parking brake) is applied before leaving the vehicle in this state
- D (drive) : this position uses all six forward gears in automatic operation
- M/S : this position engages the sport mode, which uses all six forward gears as in D, but will upshift at higher engine speeds improving acceleration
- + and - : initiates upshifts and downshifts respectively, allowing the transmission to be used as a sequential manual transmission (CommandShift® mode) with six forward gears.

The selector lever position is displayed to the driver on the selector lever position display, M/S display and in the instrument cluster.

Manual/Sport and +/- CommandShift® Sensors

The PCB in the selector lever assembly contains Hall effect sensors to activate the M/S mode and provide the +/- signals.

When the selector lever is moved to the M/S position, the lower magnet located in the selector lever is moved close to the M/S Hall effect sensor on the PCB. This provides a signal for the TCM, which initiates sport mode.

When the selector lever is moved to the + or - position, the magnet is moved close to one of the Hall effect sensors positioned either side of the M/S Hall effect sensor. When an input from either the + or - sensor is received, manual CommandShift® mode is initiated by the TCM. A spring moves the selector lever back to the center position when released. When the selector lever is moved back to the D position, the TCM returns to normal automatic operation.

Selector Lever Position and Manual/Sport Displays

The displays are incorporated into the console panel on the selector lever assembly. The selector lever position display is located on the RH (right-hand) side of the selector lever and the M/S display is located on the LH (left-hand) side of the selector lever. The two displays are connected to the PCB of the selector lever assembly. An LED (light emitting diode) is installed under the P, R, N and D of the selector lever position display and the M/S of the M/S display. The position of the selector lever is sensed by the PCB, which illuminates the related LED in the displays.

P, R, N, D Position Switch

The P, R, N, D position switch is located within the Mechatronic valve block in the transmission. The switch is operated by movement of the selector lever to the P, R, N or D positions via the selector cable, which is connected between the selector lever and the transmission selector shaft.

The switch is electrically connected to the TCM, which outputs a common power supply to each of the four switch contacts. This power supply is also used by the two speed sensors and the fluid temperature sensor in the transmission. Each of the four switch contacts have a separate output to the TCM, which enables the TCM to detect the position of the selector lever.

Shift Interlock Solenoid

The shift interlock solenoid is located on the side of the selector lever assembly. The solenoid is connected to two locking levers, which engage with the base of the selector lever and lock it in the P and N positions when the solenoid is de-energized. Operation of the solenoid is controlled by the TCM.

When the ignition is on and the brake pedal is pressed, the TCM energizes the solenoid and the selector lever can be moved from the P or N position. This prevents the selector lever from being moved to the D or R position unintentionally, and the application of the brakes prevents the vehicle 'creeping' when the transmission engages gear.

Movement of the selector lever from the P or N positions is prevented if the TCM senses the engine speed is above 2500 rev/min, even if the brake pedal is pressed.

The selector lever is locked in the N position during the transfer box changing range from high to low or vice versa.

If there is a vehicle electrical failure, or failure of the interlock solenoid or associated wiring, it is possible to move the selector lever from the P position by removing the selector lever, and the switch pack and finisher, and lifting the white tab on the rear of the selector lever assembly. While holding the tab in this position, the selector lever can be moved from the P position.

SELECTOR CABLE

The selector cable is used as a mechanical connection between the selector lever and the transmission. The cable is a Bowden cable. Movement of the selector lever between the P, R, N and D positions moves the cable. Movement of the cable is prevented when the selector lever is in the M/S position.

A seal is installed on the cable where it passes through the mounting plate. The outer cable is attached to a bracket on the transmission. The inner cable is connected to a lever attached to the transmission selector shaft.

Movement of the selector lever between the P, R, N and D positions moves the inner cable, which moves the lever. The lever transforms the linear movement of the cable into rotary movement of the selector shaft, which operates the P, R, N, D position switch and a spool valve in the Mechatronic valve block.

CONTROL DIAGRAM

transmissionmanuals.com

• NOTE: A = Hardwired; D = High speed CAN (controller area network) bus.

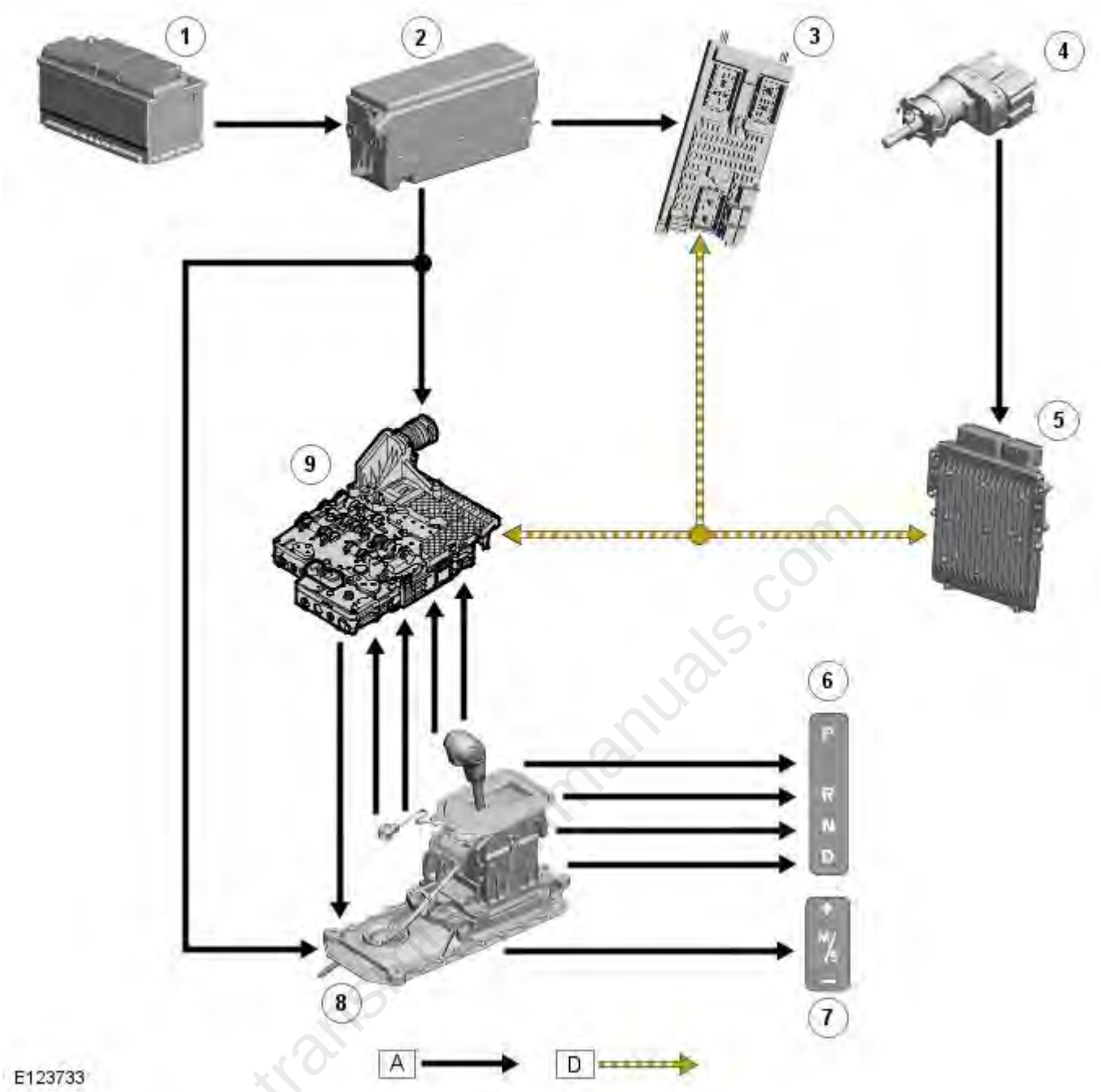

Item	Part Number	Description
1	-	Battery
2	-	EJB (engine junction box) (50 A megafuse)
3	-	CJB (central junction box) (ignition relay)
4	-	Stoplamp switch
5	-	ECM (engine control module)
6	-	Selector lever position display
7	-	M/S display
8	-	Selector lever assembly
9	-	TCM/Mechatronic valve block

Published: 11-May-2011

Automatic Transmission / Transaxle External Controls - V8 5.0L Petrol / TDV6 3.0L Diesel - External Controls

Diagnosis and Testing

Principles of Operation

For a detailed description of the automatic transmission/transaxle external controls system and operation, refer to the relevant Description and Operation section of the workshop manual.

Inspection and Verification

CAUTION: Diagnosis by substitution from a donor vehicle is **NOT** acceptable. Substitution of control modules does not guarantee confirmation of a fault, and may also cause additional faults in the vehicle being tested and/or the donor vehicle.

• NOTE: Check and rectify basic faults before beginning diagnostic routines involving pinpoint tests.

1. **1.** Verify the customer concern.
2. **2.** Visually inspect for obvious signs of mechanical or electrical damage.

Visual Inspection

Mechanical	Electrical
• Check for correct gear selector lever cable adjustment. REFER to: Selector Lever Cable Adjustment (307-05A Automatic Transmission/Transaxle External Controls - TDV6 2.7L Diesel, General Procedures). • Visibly worn or damaged components • Loose or missing fastners	• Fuses • Loose or corroded electrical connectors

3. **3.** If an obvious cause for an observed or reported concern is found, correct the cause (if possible) before proceeding to the next step.
4. **4.** If the cause is not visually evident, check for Diagnostic Trouble Codes (DTCs) and refer to the DTC Index.

DTC Index

For a list of Diagnostic Trouble Codes (DTCs) that could be logged on this vehicle, please refer to Section 100-00.

transmissionmanuals.com